MoviSight®

MS-7CHP8650CDN(-K)-Z30-SSFF

5MP 30x Anti-Corrosion Network Bullet Camera

Key Features

- 1/2.8" STARVIS™ CMOS
- Max. 5MP(2592×1944) @25/30fps resolution
- 30x optical zoom,16x digital zoom
- Supports detection and capture of faces, humans, and vehicles, as well as smoke and flame detection.
- Intelligent analysis: intrusion, single line crossing, double line crossing, loitering, wrong-way, illegal parking, and people counting.
- True WDR, 3D DNR, ICR, HLC, BLC, Defog
- -K: Support fiber optical interface
- 316L stainless steel enclosure, protecting cameras to be used in corrosive environments
- IP68 water resistant

Specification

Camera	
Image Sensor	1/2.8” Progressive Scan CMOS
Max. Resolution	5MP, 2592(H) × 1944(V)
Electronic Shutter	Auto/Manual, 1/5 to 1/100,000s
Min. illumination	Color: 0.07 Lux @ (F1.6, AGC ON), B/W: 0.02 Lux @ (F1.6, AGC ON)
Day & Night	Auto (ICR)
Wide Dynamic Range	True WDR
Wiper	Support
Lens	
Focal Length	5.3 to 159 mm, 30x Optical Zoom
Max. Aperture	F1.6 to F4.3
Field of View (FOV)	H: 56.3° to 2.7°, V: 42.4° to 2.0°
Zoom Speed	Approx. 2.5 s
Digital Zoom	16x
Iris Control	Auto/Manual
Focus Control	Auto/Manual/Semi-automatic
DORI Distance	
Detection	104 to 3,120 m (341.2 to 10,236.2 ft)
Observe	41.6 to 1,248 m (136.5 to 4,094.5 ft)
Recognize	20.8 to 624 m (68.2 to 2,047.2 ft)
Identify	10.4 to 312 m (34.1 to 1,023.6 ft)
DORI (Detect, Observe, Recognize, and Identify) is a standard system (EN-62676-4) for defining the ability of a person viewing the video to distinguish persons or objects within a covered area. The numbers in this table do not reflect intelligent function distances.	
Intelligent Analytics	
Multi-Object Detection	Supports face, human, vehicle detection and capture. Supports multiple frame modes: Full Frame, Four-corner Frame, and Mosaic.
Smoke and Flame Detection	Support
Intelligent Analysis	Intrusion, Single line crossing, Double line crossing, Loitering, Wrong-way, Illegal parking, Smart Motion Detection (support the accurate detection of vehicle and human)
People Counting	Support
Video and Audio	

Streaming Capability	3 Streams
Stream/Frame Rate	Stream1: 2592×1944, 2592×1520, 1920×1080, 1280×720 @25/30fps Stream2: D1, VGA, CIF @25/30fps Stream3: VGA, CIF, QVGA @25/30fps
Bit Rate Control	CBR/VBR
Bit Rate	Stream1: 200 kbps to 12 Mbps Stream2: 100 kbps to 6 Mbps Stream3: 100 kbps to 3 Mbps
Smart Encoder	Support
Region of Interest (ROI)	Support
Audio Compression	G.711 A-law, G.711 μ-law, RAW_PCM
Audio Bit Rate	64 kbps (G.711), 128 kbps (RAW_PCM)
Image	
Image Adjustment	Brightness, Sharpness, Contrast, Saturation adjustable
Scene Setting	Indoor, Outdoor, Mirror
Exposure Mode	Auto, Manual, Shutter priority, Iris priority
White Balance	Auto, Tungsten, Fluorescent, Daylight, Shadow, Manual
Day/Night Setting	Auto, Day, Night, Timer
Noise Reduction	2D/3D DNR
Image Enhancement	HLC, BLC, Defog, WDR, Anti-shake
Privacy Masking	Support 8 zones, mask color configurable
Event	
Alarm Triggers	IVS, Motion detection, Alarm input, Network alarm, Disk alarm, Day/Night switch alarm, Abnormal sound detection
Event Actions	Alarm record, SMTP upload, FTP upload, Alarm output, Audible alarm output
Network	
Protocols	IPv4/IPv6, HTTP/HTTPS, DNS, DDNS, DHCP, PPPoE, RTSP/ RTCP/RTP, TCP/UDP, NTP, ARP, UPnP, FTP, SMTP, QoS, ICMP, IGMP, SMTP, 802.1x, SNMP, Multicast
Interoperability	ONVIF (Profile S/T/G/M)
Max Concurrent Streams	10 channels
User/Host Level	32+ users, 3 levels: Administrator, Operator, Media user
Security	IP address filter, HTTPS, Illegal login lock, IEEE 802.1x
Web Viewer	<IE11, Chrome, Firefox, Microsoft Edge
Interface	
Network Interface	1 × RJ-45, 10/100 Mbps self-adaptive Ethernet port

Fiber Optical	-K: 1 single module fiber interface
Audio Interface	1ch Input, 1ch Output
Alarm Interface	2ch Input, 1ch Output
RS-485	Support
CVBS Interface	Support
SD Card Slot	Built-in, up to 256 GB
Reset Button	Built-in
General	
Language	English, Chinese, Traditional Chinese, Polish, Italian, Portuguese, Spanish, Russian, French, Czech, Hungarian, Japanese, Korean. Default: English
Power Supply	100 to 240VAC
Power Consumption	Less than 25W
Operating Temperature	-40°C to 60°C (-40°F to 140 °F)
Operating Humidity	Less than 90% RH
Ingress Protection	IP68
Material	SUS316L
Dimensions	522 × 176 × 215.1 mm (20.55 × 6.93 × 8.47 inch)
Net Weight	14.5 kg (31.97 lb)

Dimensions (mm)

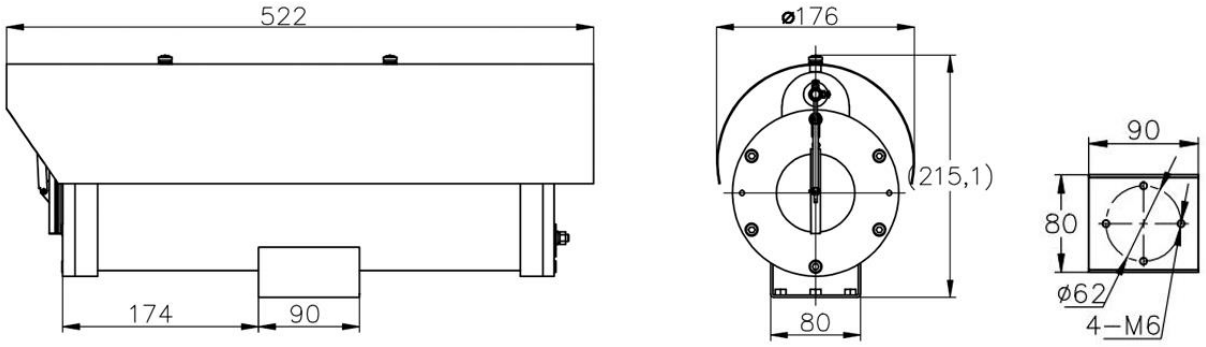

Accessories

Optional:

MS-7BK401A-SS
Wall Mount

MS-7BK406-SS
Pole Mount

MS-7BK407-SS
Corner Mount

MS-7BK400-SS(P/F/
D) Junction Box

MS-7CPL10A-SS
Washing Tank

Flexible Tube

© 2025 MoviSight all rights reserved. Design and specifications are subject to change without notice.